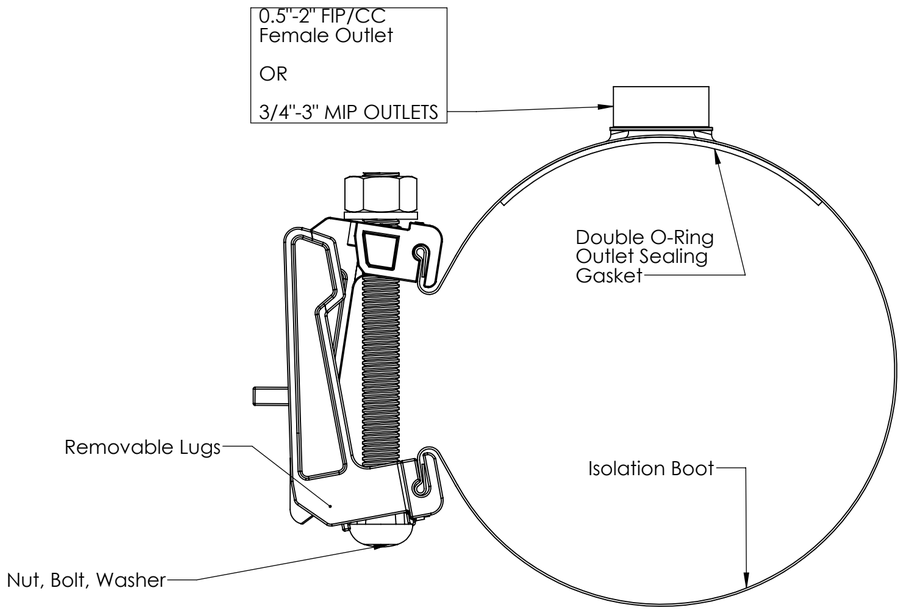

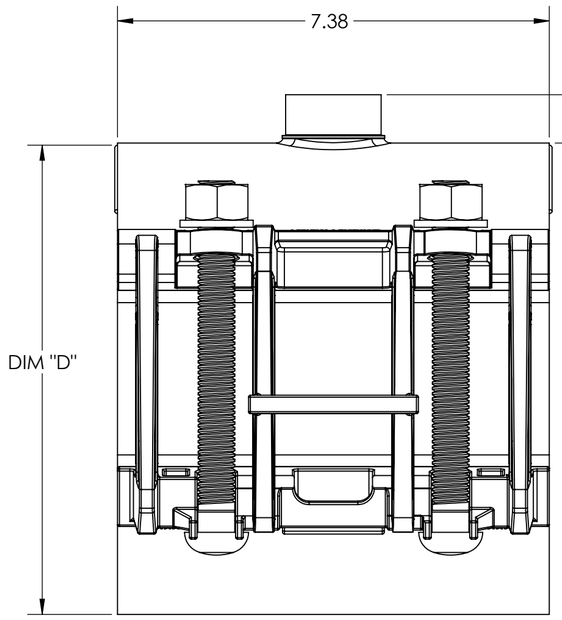

MIP OUTLETS	
SIZE	**HEIGHT**
3/4"	1.5
1"	1.5
1-1/4"	1.5
1-1/2"	1.5
2" *	2

* NOT AVIALBLE FOR 2" DIAMETER T3'S

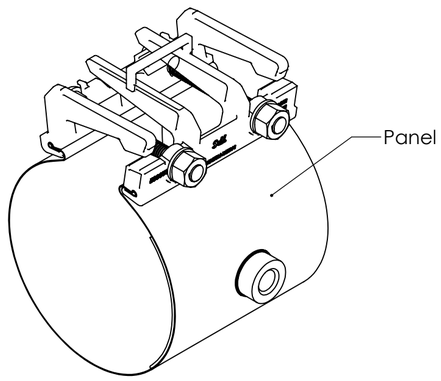

Size	Range	Panel Thickness DIM "T"	Outside Diameter on Max Range Dim "D"	FIP OUTLET SIZE	Pressure Rating
2" US	2.10-2.40	20 ga	2.6"	0.5"-1" CC or NPT	250 psi
2" OS	2.35-2.65	20 ga	2.95"	0.5"-1.5" CC or NPT	250 psi
3" US	3.10-3.30	20 ga	3.6"	0.5"-1.5" CC or NPT	250 psi
3" OS	3.30-3.60	20 ga	3.9"	0.5"-1.5" CC or NPT	250 psi
4" US	3.79-4.13	20 ga	4.4"	0.5"-2" CC or NPT	250 psi
4"	4.45-5.13	20 ga	5.4"	0.5"-2" CC or NPT	250 psi
4" OS	4.74-5.61	20 ga	5.8"	0.5"-2" CC or NPT	250 psi
5"	5.50-6.20	20 ga	6.4"	0.5"-2" CC or NPT	250 psi
6in	6.55-7.42	20 ga	7.7"	0.5"-2" CC or NPT	250 psi
6in OS	6.84-7.65	20 ga	7.9"	0.5"-2" CC or NPT	250 psi
8in CTS	7.93-8.33	18 ga	8.59"	0.5"-2" CC or NPT	250 psi
8in	8.54-9.44	18 ga	9.7"	0.5"-2" CC or NPT	250 psi
8in OS	8.98-9.84	18 ga	10.1"	0.5"-2" CC or NPT	250 psi
10in	10.64-11.46	18 ga	11.7"	0.5"-2" CC or NPT	250 psi
10in OS	11.34-12.16	18 ga	12.4"	0.5"-2" CC or NPT	250 psi
12in	12.62-13.56	16 ga	13.8"	0.5"-2" CC or NPT	250 psi
12in OS	13.65-14.42	16 ga	14.7"	0.5"-2" CC or NPT	250 psi
14in	15.22-16.16	14 ga	16.5"	0.5"-2" CC or NPT	200 psi
14in OS	16.18-16.92	14 ga	17.2"	0.5"-2" CC or NPT	200 psi
16in	17.25-18.18	14 ga	18.5"	0.5"-2" CC or NPT	200 psi
16in OS	18.42-19.23	14 ga	19.5"	0.5"-2" CC or NPT	200 psi

Specifications:

Temperature Rating: 180°F
Gasket: NSF-61 NBR
Panel: 304/L Stainless Steel or 316/L Stainless Steel
Lugs: Removable Cast 304/L Stainless Steel or Cast 316/L Stainless Steel
Outlet: 304/L Stainless Steel or 316/L Stainless Steel
Isolation Boot: EPDM
Bolts, Nuts, Washer: 304 Stainless or 316 Stainless (Fluoropolymer Coated)
Viton Coating available upon request

THE INFORMATION DISCLOSED IN THIS DOCUMENT, INCLUDING ALL DESIGNS AND RELATED MATERIALS, IS THE VALUABLE PROPERTY OF DRESSER WATER, LLC (DW). DW RESERVES ALL PATENT, COPYRIGHT, AND PROPRIETARY RIGHTS TO THE INFORMATION SET FORTH IN THIS DOCUMENT INCLUDING ALL DESIGN, MANUFACTURING, REPRODUCTION, USE AND SALES RIGHTS THERETO, EXCEPT TO THE EXTENT SAID RIGHTS ARE EXPRESSLY GRANTED TO OTHERS. REPRODUCTION, TRANSMISSION, OR DISCLOSURE, WITHOUT DW'S EXPRESS PRIOR WRITTEN CONSENT, OF THIS DOCUMENT OR THE INFORMATION SET FORTH IN THIS DOCUMENT TO ANY THIRD PARTY IS PROHIBITED.

UNLESS OTHERWISE SPECIFIED DIMENSIONS ARE IN INCHES.
TOLERANCES ARE:
FRACTIONS: ±1/16" ANGLE: ± 1°
DECIMALS: .XX ±.02
.XXX ±.005
DO NOT SCALE DRAWING
THIRD ANGLE PROJECTION

CONTRACT NO.

APPROVALS	DATE
DRAWN: CBR	12/20/24
CHECKED:	
APPD:	
CUST:	

DRESSER WATER, LLC
P.O. BOX 586, OLEAN, N.Y. 14760

TITLE
T3 Saddle Single Panel Removable Lug Submittal

SIZE	CAGE CODE	DWG NO	REV
C		50200-5	G

SCALE 1:4 WEIGHT SHEET 1 OF 1

SHT 1 REV G DRAWING NO. 50200-5