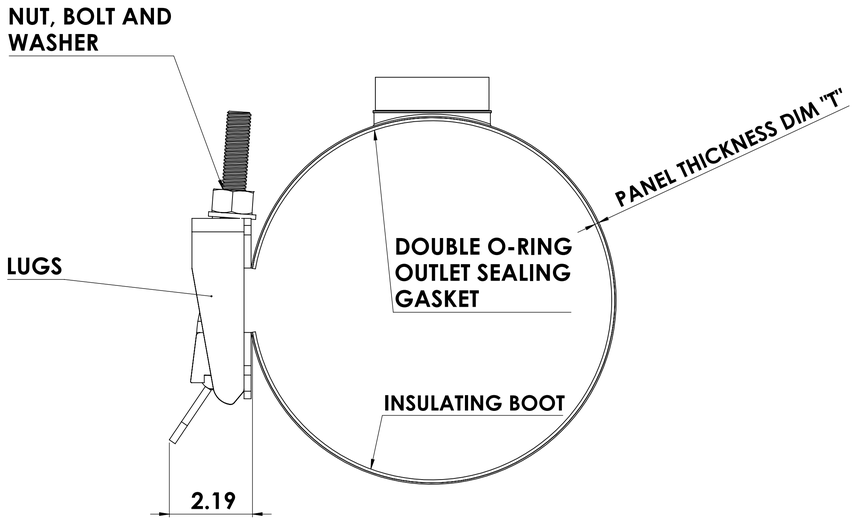

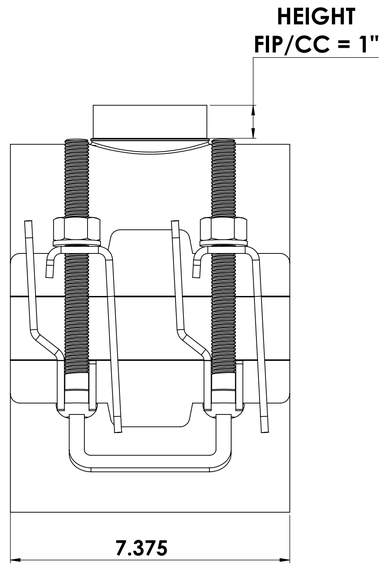

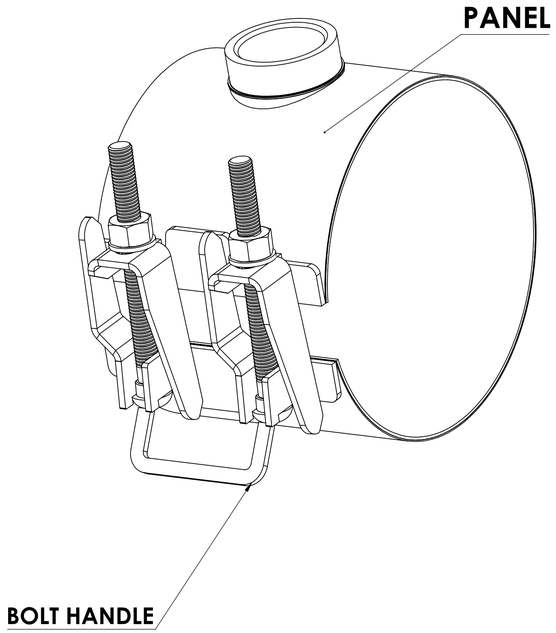

SIZE	RANGE	PANEL THICKNESS DIM "T"	FIP OUTLET SIZE
2"	2.35-2.63	22 GA	0.5"-1.5" NPT or CC
	2.70-3.00	22 GA	0.5"-1.5" NPT or CC
	2.97-3.25	22 GA	0.5"-1.5" NPT or CC
3"	3.46-3.70	22 GA	0.5"-1.5" NPT or CC
	3.73-4.00	22 GA	0.5"-1.5" NPT or CC
	3.96-4.25	22 GA	0.5"-1.5" NPT or CC
	4.45-4.73	22 GA	0.5"-1.5" NPT or CC
4"	4.50-4.80	20 GA	0.5"-2.0" NPT or CC
	4.74-5.14	20 GA	0.5"-2.0" NPT or CC
	4.95-5.35	20 GA	0.5"-2.0" NPT or CC
	5.22-5.62	20 GA	0.5"-2.0" NPT or CC
6"	5.95-6.35	20 GA	0.5"-2.0" NPT or CC
	6.56-6.96	20 GA	0.5"-2.0" NPT or CC
	6.84-7.24	20 GA	0.5"-2.0" NPT or CC
	7.05-7.45	20 GA	0.5"-2.0" NPT or CC
	7.45-7.84	20 GA	0.5"-2.0" NPT or CC
8"	7.95-8.35	18 GA	0.5"-2.0" NPT or CC
	8.54-8.94	18 GA	0.5"-2.0" NPT or CC
	8.99-9.39	18 GA	0.5"-2.0" NPT or CC
	9.27-9.67	18 GA	0.5"-2.0" NPT or CC
10"	9.70-10.10	18 GA	0.5"-2.0" NPT or CC
	10.60-11.04	18 GA	0.5"-2.0" NPT or CC
	11.04-11.44	18 GA	0.5"-2.0" NPT or CC
	11.34-11.74	18 GA	0.5"-2.0" NPT or CC
	11.75-12.16	18 GA	0.5"-2.0" NPT or CC
12"	12.00-12.40	14 GA	0.5"-2.0" NPT or CC
	12.60-13.02	14 GA	0.5"-2.0" NPT or CC
	13.10-13.50	14 GA	0.5"-2.0" NPT or CC
	13.40-13.80	14 GA	0.5"-2.0" NPT or CC
	13.70-14.10	14 GA	0.5"-2.0" NPT or CC
	14.00-14.40	14 GA	0.5"-2.0" NPT or CC

SPECIFICATIONS:

Temperature Rating: 180 Degrees F
Sealing Gasket: NSF-61 NBR
Panel: 304/L Stainless Steel or 316/L Stainless Steel
Lugs: 304/L Stainless Steel or 316/L Stainless Steel
Outlet: 304/L Stainless Steel or 316/L Stainless Steel
Isolation Boot: EPDM
Bolts: 304 or 316 Stainless Steel, Bare- Passivated and Electropolished
Nuts/Washers: 304 or 316 Stainless Steel Fluoropolymer Coated for Anti-Gall Protection
Torque Requiments: Based on Bare bolts with Fluoropolymer coated Nuts/Washers
See Product Label for Actual Torque Requirements
Working Pressure: Up to 250 PSI, See Product Label for Actual Product Working Pressure

MEETS AIS COMPLIANCE

THE INFORMATION DISCLOSED IN THIS DOCUMENT, INCLUDING ALL DESIGNS AND RELATED MATERIALS, IS THE VALUABLE PROPERTY OF DRESSER WATER, LLC (DW). DW RESERVES ALL PATENT, COPYRIGHT, AND PROPRIETARY RIGHTS TO THE INFORMATION SET FORTH IN THIS DOCUMENT INCLUDING ALL DESIGN, MANUFACTURING, REPRODUCTION, USE AND SALES RIGHTS THERETO, EXCEPT TO THE EXTENT SAID RIGHTS ARE EXPRESSLY GRANTED TO OTHERS. REPRODUCTION, TRANSMISSION, OR DISCLOSURE, WITHOUT DW'S EXPRESS PRIOR WRITTEN CONSENT, OF THIS DOCUMENT OR THE INFORMATION SET FORTH IN THIS DOCUMENT TO ANY THIRD PARTY IS PROHIBITED.

UNLESS OTHERWISE SPECIFIED DIMENSIONS ARE IN INCHES.
TOLERANCES ARE:
FRACTIONS: ±1/16" ANGLE: ± 1°
DECIMALS: .XX ±.01
.XXX ±.005
DO NOT SCALE DRAWING
THIRD ANGLE PROJECTION

CONTRACT NO.

APPROVALS	DATE
DRAWN: CBR	9/7/2022
CHECKED: RF	9/8/22
APPD:	
CUST:	

DRESSER WATER, LLC
P.O. BOX 586, OLEAN, N.Y. 14760

TITLE
AIS Compliant Fabricated T3 Saddle Single Panel Submittal

SIZE D | CAGE CODE | DWG NO 50400 | REV C
SCALE 1:2 | WEIGHT | SHEET 1 OF 1