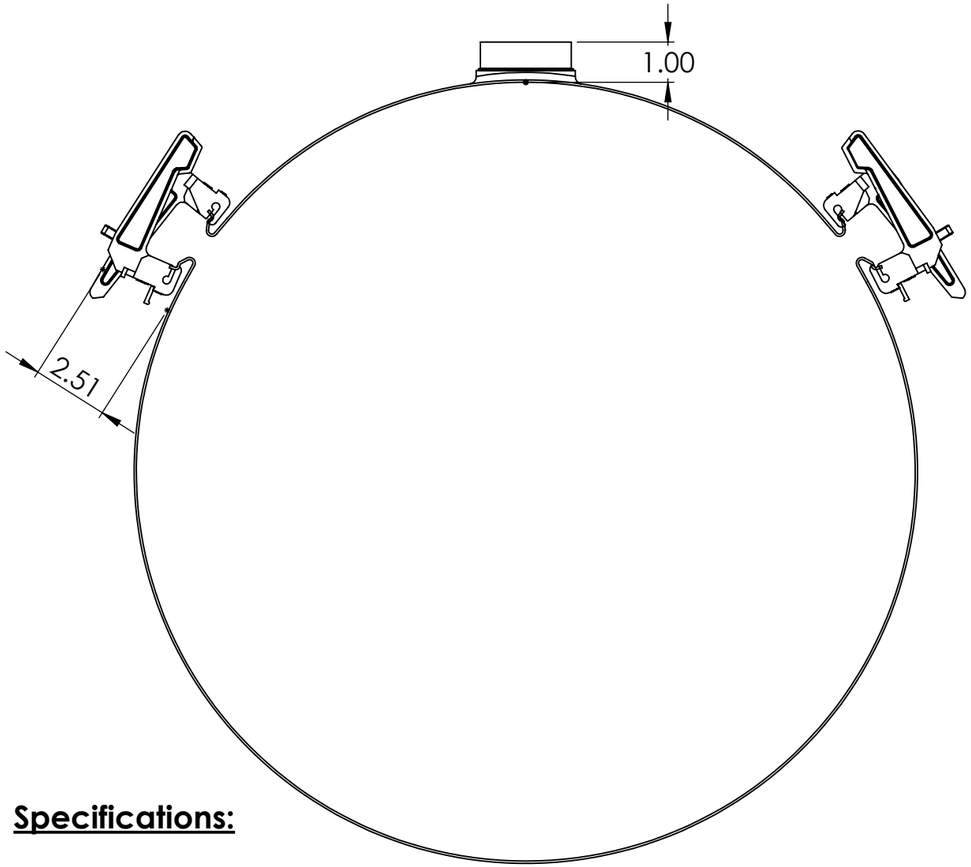

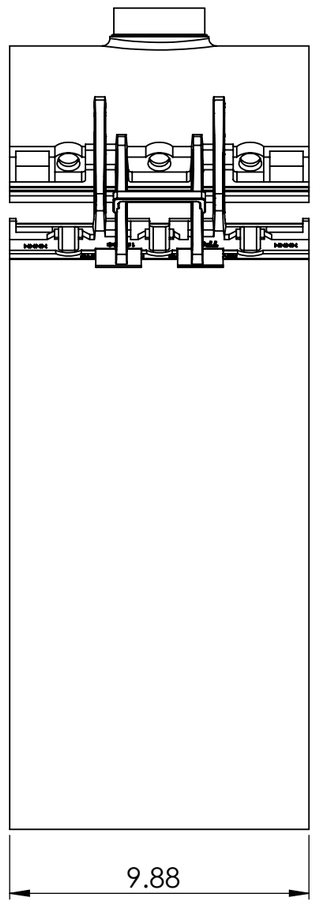

MIP OUTLETS - "H"

SIZE	HEIGHT
3/4"	1.5
1"	1.5
1-1/4"	1.5
1-1/2"	1.5
2"	2
3"	3

Size	Range	Panel Thickness DIM "T"	Outlet Size
18"	19.32-21.04	14 Ga	0.5"-2" CC or NPT
18" OS	21.10-22.80	14 Ga	0.5"-2" CC or NPT
20"	23.20-25.10	14 Ga	0.5"-2" CC or NPT
24"	25.60-27.30	14 Ga	0.5"-2" CC or NPT
24" OS	27.80-29.70	14 Ga	0.5"-2" CC or NPT
30"	29.70-30.30	14 Ga	0.5"-2" CC or NPT

**NOTE
REFER TO INDIVIDUAL PRODUCT LABEL FOR PRESSURE RATING.

Specifications:

Temperature Rating: 180°F
Gasket: NSF-61 NBR
Panel: 304/L or 316/L Stainless Steel
Lugs: Cast 304L or 316/L Stainless Steel
304/L Lugs are available in weldon or removable options
316/L Lugs are available in weld-on only
Outlet: 304 or 316/L Stainless Steel
Isolation Boot: EPDM
Bolts, Nuts, Washer: 304 Stainless (Fluoropolyer Coated) or 316/L

THE INFORMATION DISCLOSED IN THIS DOCUMENT, INCLUDING ALL DESIGNS AND RELATED MATERIALS, IS THE VALUABLE PROPERTY OF DRESSER WATER, LLC (DW). DW RESERVES ALL PATENT, COPYRIGHT, AND PROPRIETARY RIGHTS TO THE INFORMATION SET FORTH IN THIS DOCUMENT INCLUDING ALL DESIGN, MANUFACTURING, REPRODUCTION, USE AND SALES RIGHTS THERETO, EXCEPT TO THE EXTENT SAID RIGHTS ARE EXPRESSLY GRANTED TO OTHERS. REPRODUCTION, TRANSMISSION, OR DISCLOSURE, WITHOUT DW'S EXPRESS PRIOR WRITTEN CONSENT, OF THIS DOCUMENT OR THE INFORMATION SET FORTH IN THIS DOCUMENT TO ANY THIRD PARTY IS PROHIBITED.

UNLESS OTHERWISE SPECIFIED DIMENSIONS ARE IN INCHES.
TOLERANCES ARE:
FRACTIONS: ±1/16" ANGLE: ± 1°
DECIMALS: .XX ±.02
.XXX ±.005
DO NOT SCALE DRAWING
THIRD ANGLE PROJECTION

CONTRACT NO.

APPROVALS	DATE
DRAWN:	RJF
CHECKED:	
APPD:	
CUST:	

DRESSER UTILITY SOLUTIONS
DRESSER WATER, LLC P.O. BOX 586, OLEAN, N.Y. 14760

TITLE
T3 Double Panel Submittal

SIZE	CAGE CODE	DWG NO	REV
B		50212	C

SCALE 1:10 | WEIGHT | SHEET 1 OF 1