DRESSER®
UTILITY SOLUTIONS

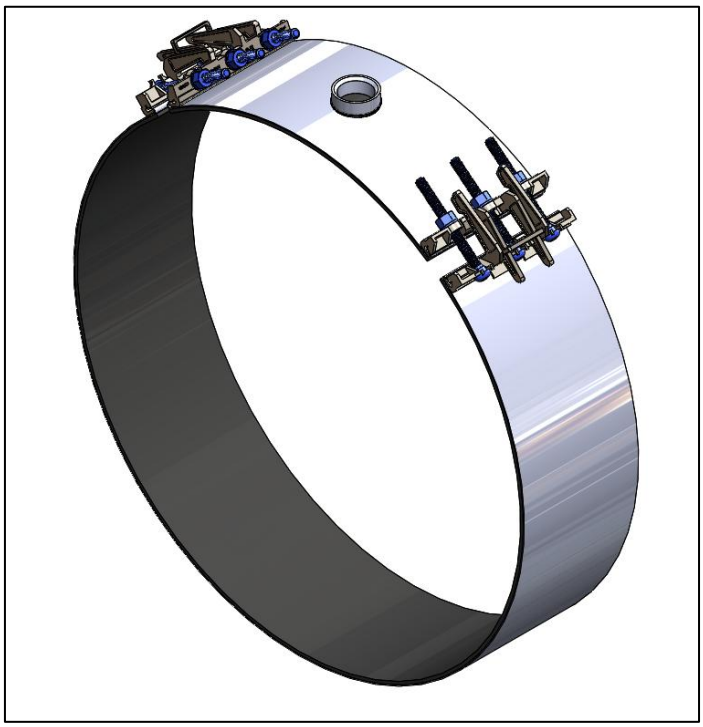

DRESSER WATER, LLC
TRIPLE-TAP®
Type “T3” Wide Range
Service Saddle
10” Wide - Multi Panel

Technical Specifications

Product Design Covered by US Patent 9970584

TRIPLE TAP® "T3" Wide Range Service Saddle Specifications

Patent Pending

1. Pressure Rating: Triple Tap® "T3" Service Saddles by Total Piping Solutions, Inc. when properly installed are capable of working pressures up to 175 psi with hydrostatic test pressures up to 275 psi.

   Note: Pressure rating will not exceed the pressure rating of the pipe on which the service saddle is installed. For any particular installation, the allowable working pressure will be determined by the size of pipe, type of pipe, condition of the pipe, service conditions, environmental conditions, and installation workmanship. Always consult the factory for specific information regarding application and working pressure.

2. Temperature Rating: Maximum Continuous Working Temperature Range is 180° F for Standard NSF NBR Gasket

3. Sealing Gasket: NSF-61 Approved NBR Rubber – For water service

4. Band: 9.875" Wide, 18 to 36 inch diameters – 14 gage (.075") thickness – Double Panel

5. Mains Pipe: Dresser Triple Tap® "T3" Service Saddles are designed for use with Steel, Cast Iron, Ductile Iron, PVC, High Density Polyethylene (SDR 17 or Thicker), Asbestos Cement conductor pipe materials.

DRESSER WATER, LLC
(716)-372-0160

TRIPLE TAP® "T3" Wide Range Service Saddle Specifications

Patent Pending

TRIPLE TAP® "T3" Wide Range Service Saddle Benefits

1. No special tools required to install the sleeve.
2. Seals on the outlet aperture. (Not a 360° Band Seal)
3. Outlet sizes include ½" through 2" in both NPT and CC threads.
4. Outlet design features a spin-extruded branch with higher strength welds.
5. Equipped with an isolation boot that prevents metal band contact with the pipe and reduces the potential for corrosion when used on ferrous pipe materials.
6. Unique Patented extended Cam Lug system provides a maximum of 0.9 in of diameter range for single panel saddles and up to 1.9" of diameter rage for double panel saddles.
8. Patented Cam Lug system includes built in handle for ease of installation.
9. Note: See Materials of Construction diagram for additional information.

Triple Tap® "T3" Wide Range Service Saddles Multi-Panel

Nominal Diameter	Lower Diameter	Upper Diameter	Connection Sizes	CTS	IPS	DI	Pit Cast	AC100	AC150	AC200
18	19.32	21.04	1/2 to 2"		20.00	19.50	19.92	19.90	20.94	
18 o.s.	21.10	22.80	1/2 to 2"			21.60	22.06		21.30	22.54
20	23.20	25.10	1/2 to 2"		24.00			23.64		25.02
24	25.60	27.30	1/2 to 2"			25.80	26.32	27.17		
24 o.s.	27.80	29.70	1/2 to 2"					28.32	29.62	
30	29.70	30.30	1/2 to 2"		30.00					29.98
30 o.s.	31.96	32.46	1/2 to 2"			32.00	32.40			
36	35.80	36.20	1/2 to 2"		36.00					
36 o.s.	38.10	38.50	1/2 to 2"			38.30				
42	44.3	44.7	1/2 to 2"			44.50				
48	50.6	51.00	1/2 to 2"			50.80				

DRESSER WATER, LLC
(716)-372-0160

TRIPLE TAP® "T3" Wide Range Service Saddle Specifications

Patent Pending

Applicable Standards:

ASTM A380-06 Standard Practice for Cleaning Descaling and Passivation of Stainless Steel Parts Equipment and Systems

ASTM A967-05 Standard Specification for Chemical Passivation Treatments for Stainless Steel Parts.

ANSI/AWWA C800 Standard for Underground Service Line Valve and Fittings

NSF/ANSI STANDARD 61 - Drinking Water System Components

ASTM D2000 - 12 Standard Classification System for Rubber Products.

Product Warnings

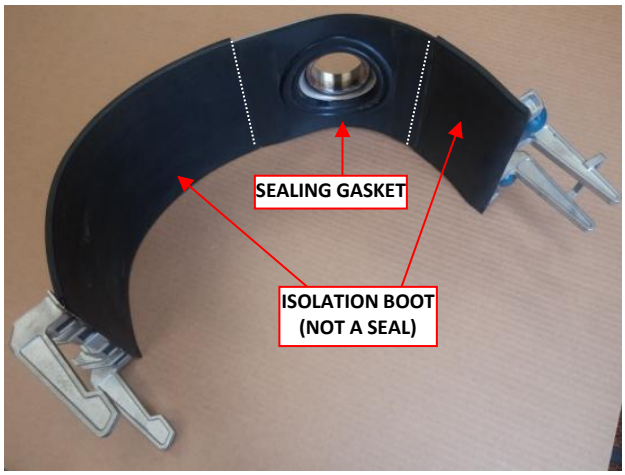

**** Note: Provides aperture seal only, Not a 360° sealing Product****



Saddle Reuse:

Saddles must not be reused until refurbished at TPS

DRESSER WATER, LLC
(716)-372-0160

DRESSER UTILITY SOLUTIONS

TRIPLE TAP® "T3" Wide Range Service Saddle Specifications

Patent Pending

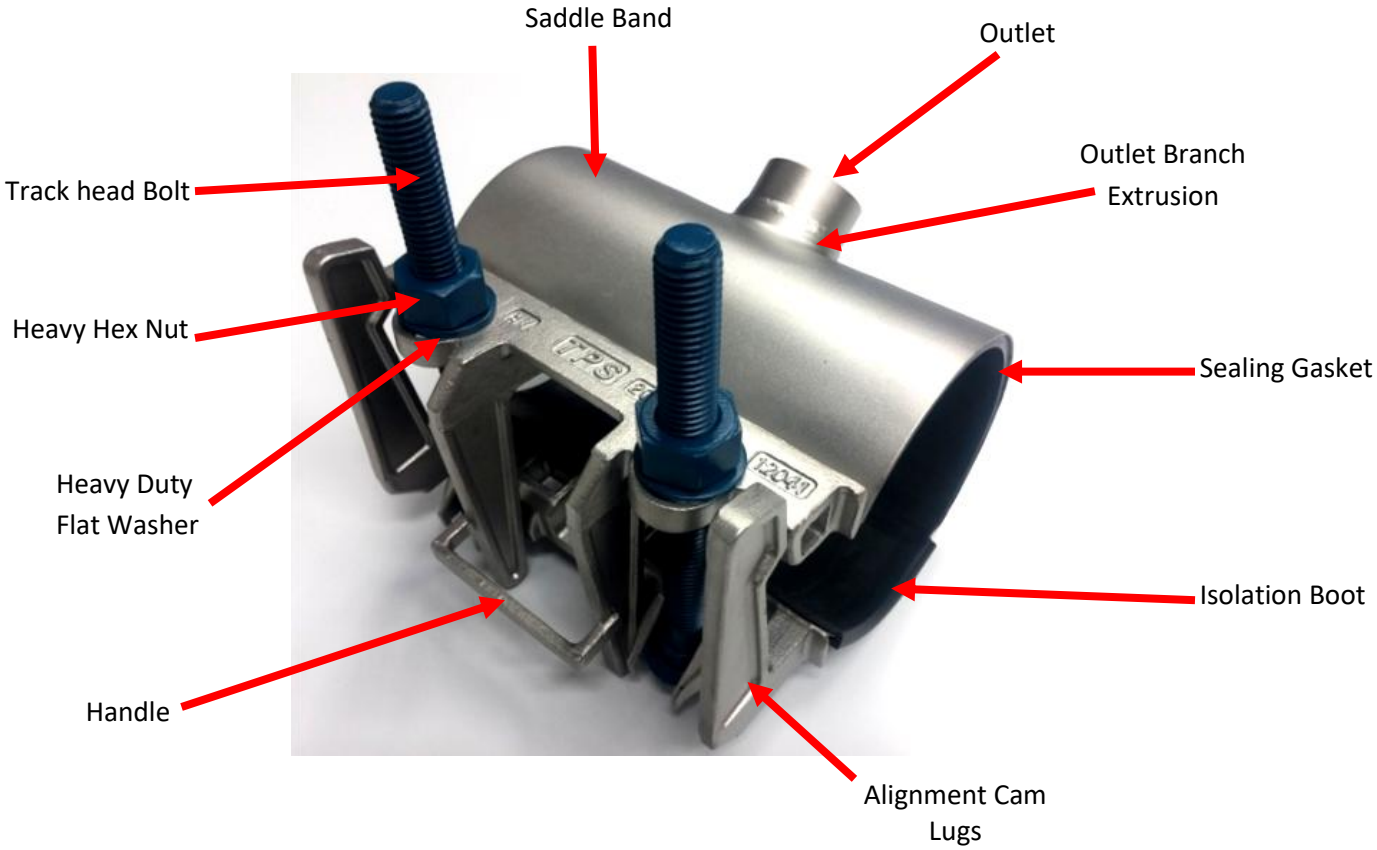

Materials of Construction

Outlet:	18-8 Stainless Steel
Saddle Band:	14 Gage 18-8 Stainless Steel
Alignment Cam Lugs:	Removable 18-8 Stainless Steel
Gaskets:	Material: Nitrile Butadiene Rubber (NBR)Approved NSF-61
Isolation Boot:	Ethylene Propylene Diene Monomer (EPDM) Rubber
Bolts:	Oval Neck Track head per ANSI/ASME B18.10 5/8-11 UNC Rolled Thread 18-8 Type 304 Stainless Steel per ASTM A-193 Grade B8 Finish: Double Fluoroelastomer coating.
Nuts:	Heavy Hex Nut 5/8-11 UNC Rolled Thread Type 316 High Temp Stainless Steel per ASTM A-194 Grade 8 Finish: Double Fluoroelastomer coated to prevent galling.
Washers:	Heavy Duty 5/8 Inch Washer Material 18-8 Type 304 Stainless Steel Double Fluoroelastomer coated to prevent galling

DRESSER WATER, LLC
(716)-372-0160

Features

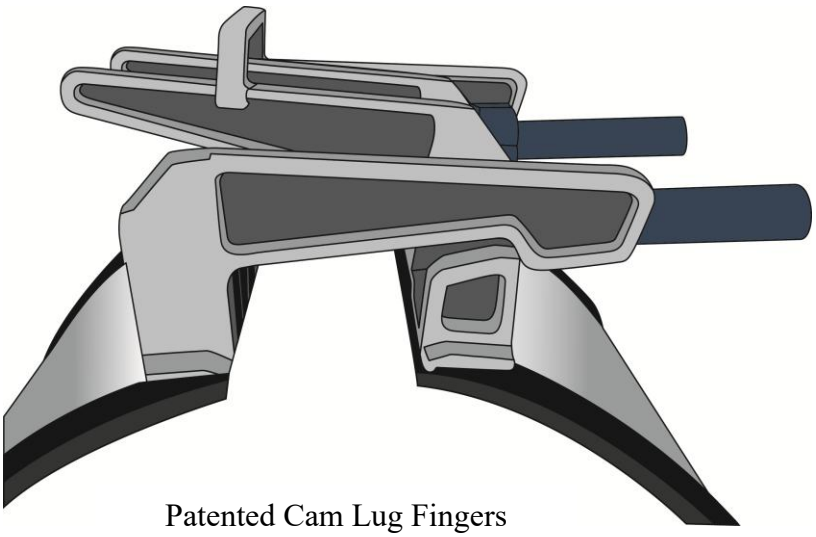

Patented Cam Lug Fingers
For Extended Range & Ease of Installation

Body 100% Isolated from Pipe with Sealing Gasket and Isolation Boot to prevent Bi-Metallic Corrosion. Also allowing saddle to grip smooth pipe better.

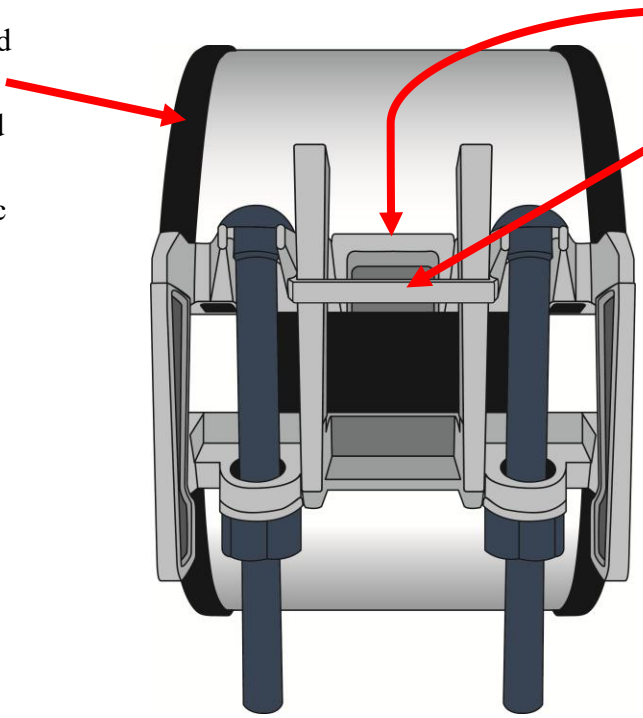

Integrated Handle and Finger Tab for Ease of Installation.

DRESSER WATER, LLC
(716)-372-0160